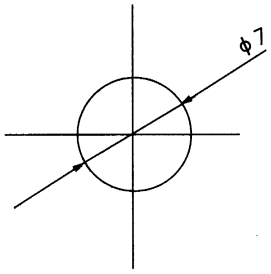
ϕ7

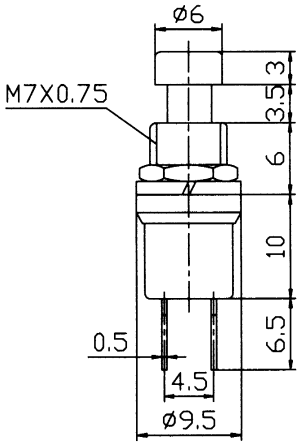
ϕ6
M7X0.75
3
3.5
6
10
6.5
0.5
4.5
ϕ9.5

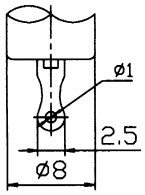
ϕ1
2.5
ϕ8